WO WALL OVEN

Parts List

MODEL:
DCS-WO-227SS

PRODUCT CODE:
217834

PRODUCT

Brand	DCS
Voltage	110V 60Hz
Model	DCS-WO-227SS
Product Code	217834

Fisher & Paykel Appliances
5900 Skylab Road, Huntington Beach,
CA 92647
Customer Care: (888) 281-5698
Fax: (714) 372-7003
www.dcsappliances.com
support@dcsappliances.com

COPYRIGHT © FISHER & PAYKEL LTD 2006 - ALL RIGHTS RESERVED

CONTENTS

OVEN CAN COMPONENTS 6
OVEN DOOR COMPONENTS 8
DISPLAY COMPONENTS 10
UPPER OVEN COMPONENTS 12
LOWER OVEN COMPONENTS 14
BAKE COMPONENTS 16
FASTENERS 19

GUIDE TO USING THIS MANUAL
The model covered by this manual is listed on the front cover.

The information detailed in this manual is subject to change without notice. The latest version is indicated by the reprint date and replaces any earlier editions.

The front cover picture shows the type of product and may not necessarily be an exact image of the model covered by the manual.

Kit Parts
Kit components are shown in *italics.* Where a part number is shown against the descriptions for these kit components, they are also available as separate items. In addition, some parts may be supplied with these kits that are not available as separate items, and are therefore either not listed, or a part number is not shown against the part description in this manual.

Parts List Key

italics	Kit components or parts included are shown in *italics*. Refer to above notes: Kit Parts.
NI	As a part reference, indicates the part is not illustrated on the diagram.
NOT USED	As a part number, indicates the diagram part reference is not used in this manual.

217834

OVEN CAN COMPONENTS

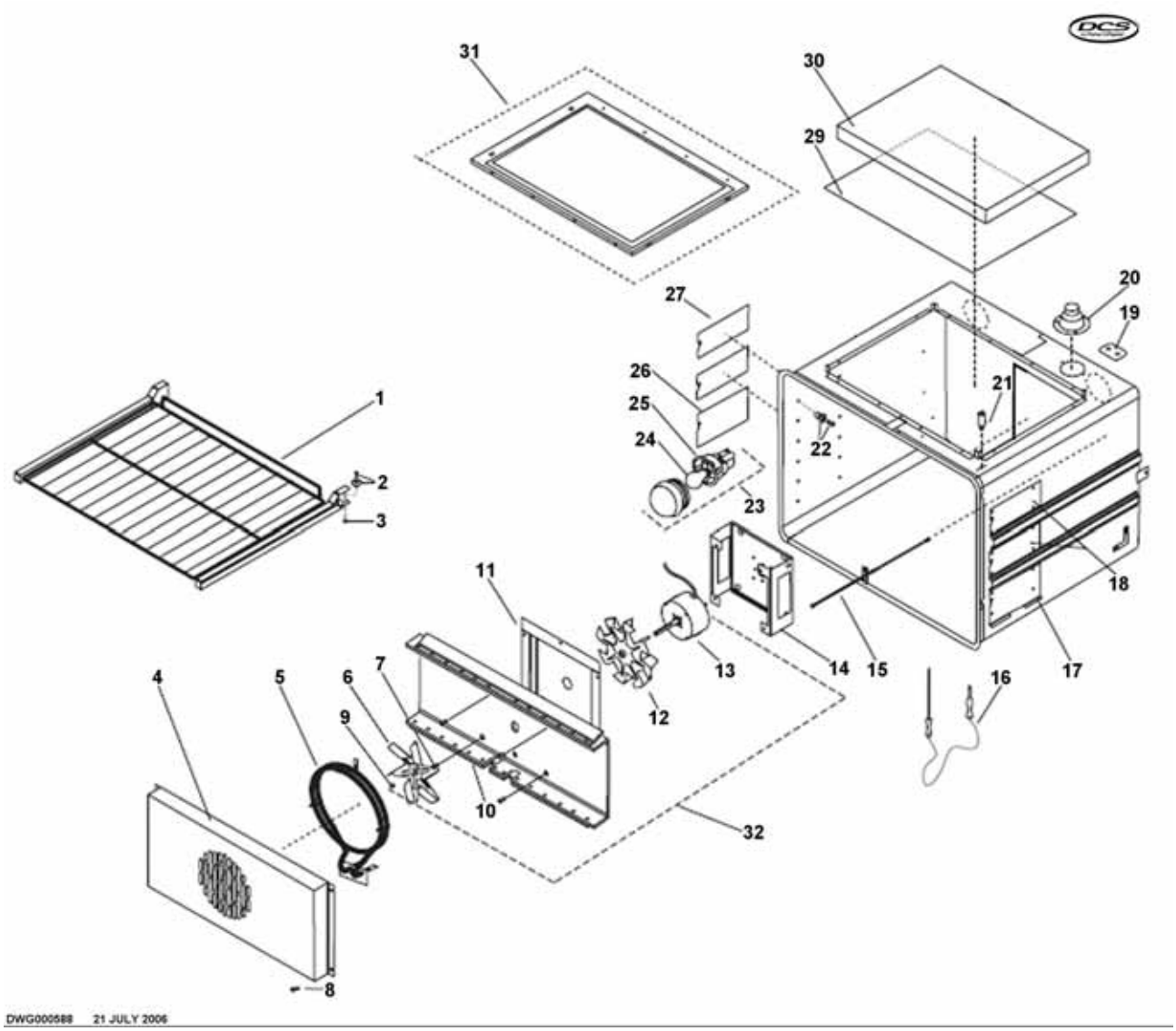

OVEN CAN COMPONENTS

REF	PART	DESCRIPTION
1	217177	RACK ASSY
2	211090	RACK ROLLER VERTICAL
3	218150	NUT HEX 10-24 KEPS SS (10 PK)
4	233695	CONV BAFFLE W/A PORCELAIN
5	211703	CONVECTION ELEMENT
NI	211242P	MS 10-24X1/2 PH PN TY F SS (10 PK)
6	211631	BLADE.ASSY.RG CONVECTION FAN
7	211242P	MS 10-24X1/2 PH PN TY F SS (10 PK)
8	211242P	MS 10-24X1/2 PH PN TY F SS (10 PK)
9	211294	SET SCREW 10-32X3/16 STAIN
10	233689	PAD CONVECTION W/A
NI	211255	MS 10X1/2 FL HD PH TY AB CRS
11	217317	CONVECTION PAD
NI	211242P	MS 10-24X1/2 PH PN TY F SS (10 PK)
12	211580	MOTOR COOLING BLADE
NI	211255	MS 10X1/2 FL HD PH TY AB CRS
13	211877	MOTOR CONV. 120V BRG W/BLADE
14	217099	CONVECTION MOTOR BRACKET
15	211650	TEMP SENSOR
NI	211259	8-32X1/4 PHIL PN F-410 SS
16	211710	FOOD PROBE
17	217182	ROLLER SUPPORT LOWER RH W/A
18	217180	ROLLER SUPPORT UPPER RH W/A
19	NOT USED	ITEM NOT USED IN THIS MODEL
20	210370	CATALYST
21	211706	PROBE JACK
22	211090	RACK ROLLER VERTICAL
23	211689	OVEN LAMP ASSY
24	211687	OVEN LAMP REPLACEMENT GE
25	211688	RECEPTACLE
26	217183	ROLLER SUPPORT LOWER LH W/A
27	217181	ROLLER SUPPORT UPPER LH W/A
29	211695	BROIL GLASS
30	211694	BROIL ELEMENT
NI	211250	MS 10-24X1 PH PN TY F SS
31	217136	RETAINER BROIL GLASS FT/BACK
NI	217137	RETAINER BROIL GLASS LF/RT
NI	211250	MS 10-24X1 PH PN TY F SS
32	215798	CONV. ASSY 120V BRG W/BLADE
NI	212435	BROILER PAN/TRAY PAN PORC.

217834

OVEN DOOR COMPONENTS

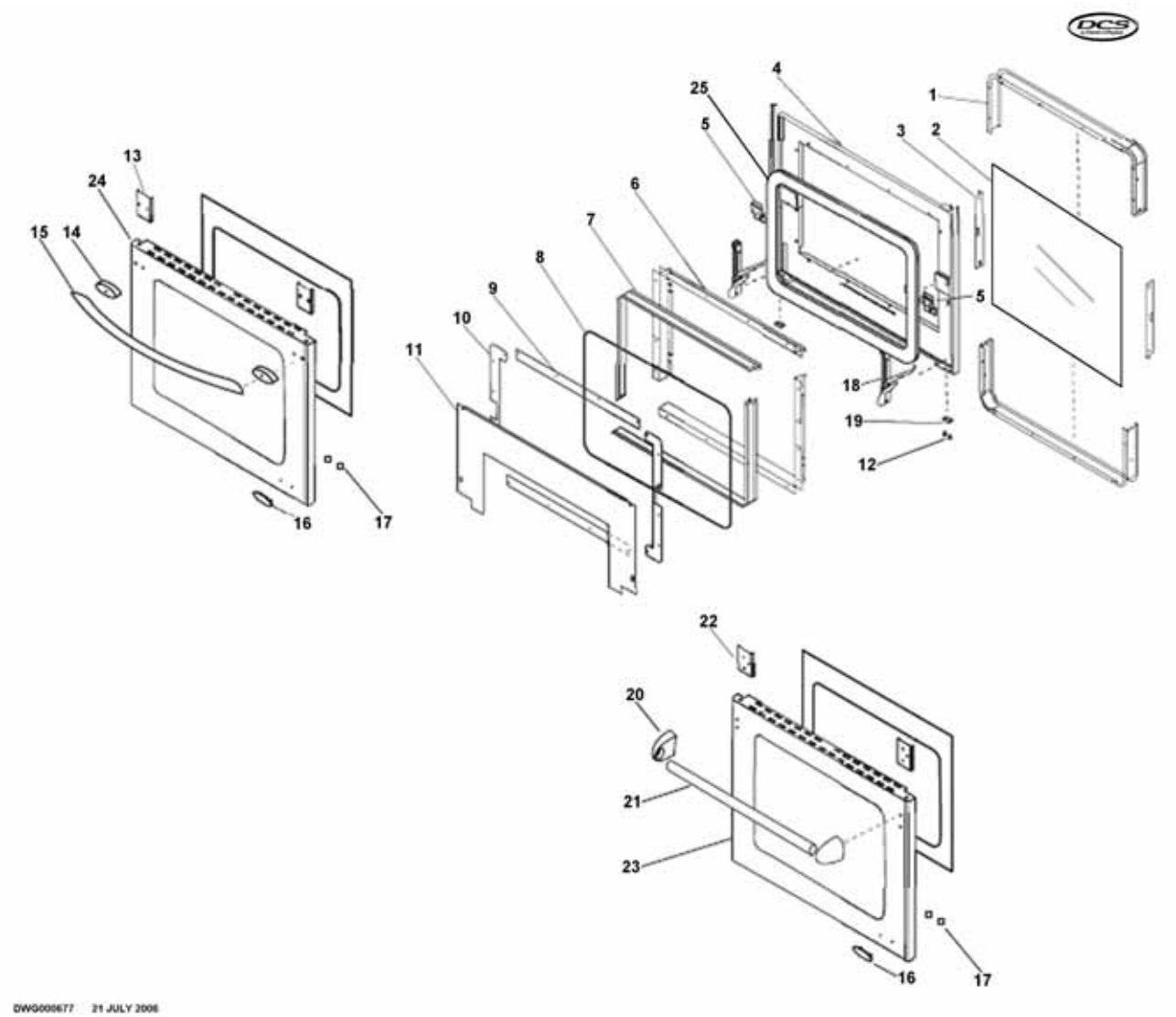

OVEN DOOR COMPONENTS

REF	PART	DESCRIPTION
1	217194	DOOR SEAL W/A PORC
2	211081	INSIDE DOOR GLASS 227
3	217128	DOOR SEAL CHANNEL
4	217174	LINER DOOR W/A PORCELAIN
5	217095	HINGE TOP BRACKET
6	217125	DOOR INSULATION COVER
7	217126	GLASS SPACER
8	211083	INNER DOOR GLASS 227
9	217122	GLASS COVER TOP/BTM
10	217123	GLASS COVER SIDE
11	233254	DOOR HEAT SHIELD
12	211241P	SMS 10-24X1/2 PH TR TY23 ZI (10 PK)
13	217100	HANDLE STIFFENER
14	210495	DOOR HANDLE SPACER CHROME PTD
15	210445	DOOR HANDLE TUBE
16	211957	LOGO DCS (BLACK ON CHROME)
17	211419P	LOGO - CLIP (2 PK)
18	211344	30 DOOR HINGE NUOVA STAR
19	217102	HINGE BOTTOM PLATE
20	NOT USED	ITEM NOT USED IN THIS MODEL
21	NOT USED	ITEM NOT USED IN THIS MODEL
22	NOT USED	ITEM NOT USED IN THIS MODEL
23	NOT USED	ITEM NOT USED IN THIS MODEL
24	217277	DOOR SKIN ASSY SS W/LOGO
	217276	DOOR SKIN ASSY SS NO LOGO
25	217370	BORDER INSIDE GLASS PAINTED
NI	211092	DOOR GASKET

217834

DISPLAY COMPONENTS

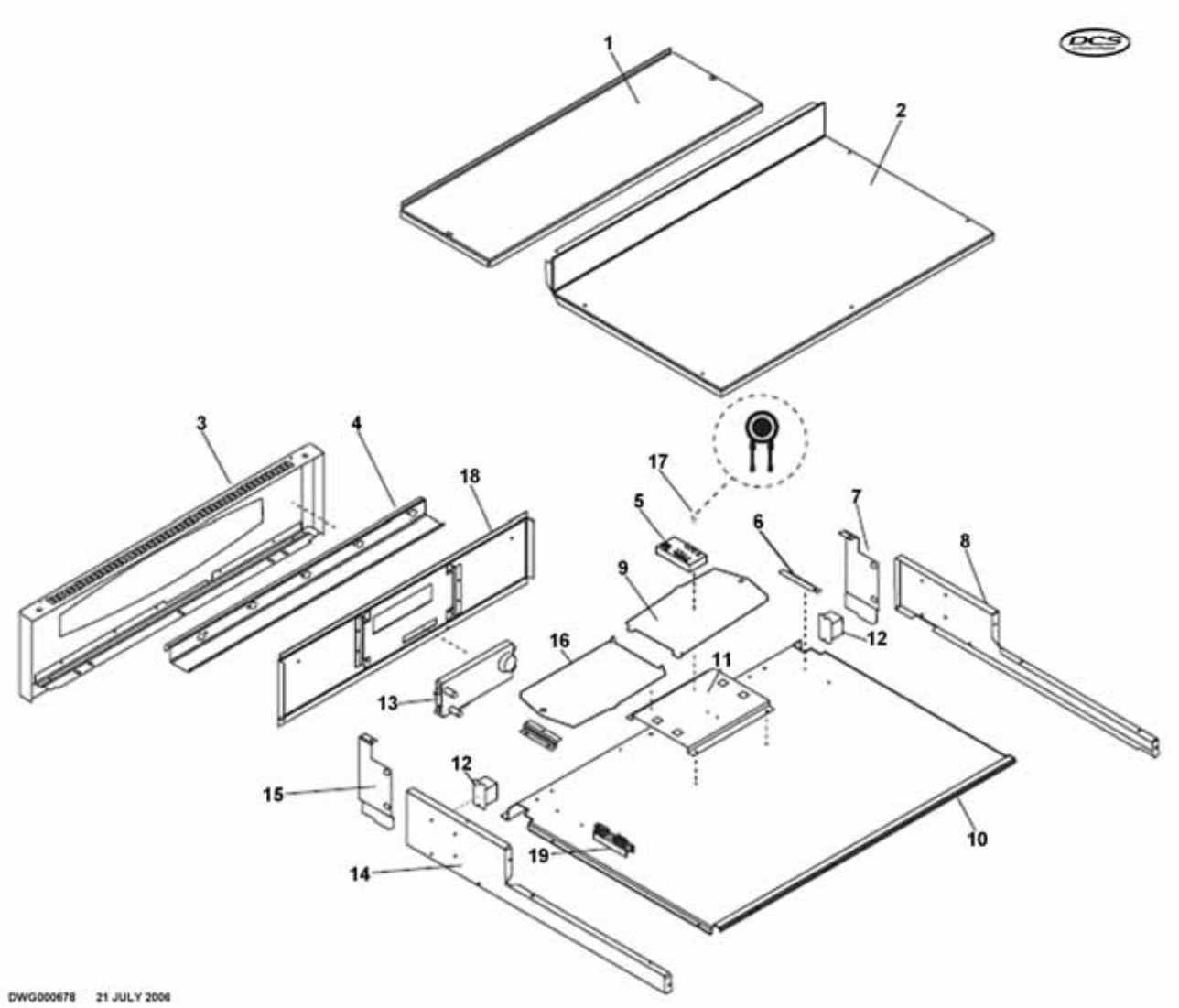

DISPLAY COMPONENTS

REF	PART	DESCRIPTION
1	217142	CONTROL COVER FRONT PTD
2	217143	CONTROL COVER REAR
3	217167	CONTROL PANEL SKIN W/A SS
4	233159	BOTTOM CONTROL MTG BKT SS
5	211700	TERMINAL BLOCK TSI-3
6	217096	RELAY MOUNT ENDS
7	217139	CONTROL PANEL MTG BKT LH
8	217107	CONTROL BOX SIDE LH
9	218224	KIT MAIN RELAY PCB 27 WO/WOS
10	233097	OUTER AJ TOP
11	233096	RELAY MOUNT CENTER
12	211712	RELAY SPDT
13	211696	ELECTRONIC OVEN CONTROL DOUBLE
14	217106	CONTROL BOX SIDE RH
15	217138	CONTROL PANEL MTG BKT RH
16	211709	L/O RELAY BOARD
17	211759	M.O.V. ASSEMBLY
18	219125	KIT CONTROL SYSTEM WO227/230 BK/SS
19	211768	TERMINAL BLOCK
NI	211794	WIRE HARNESS SINGLE WALL OVEN

217834

UPPER OVEN COMPONENTS

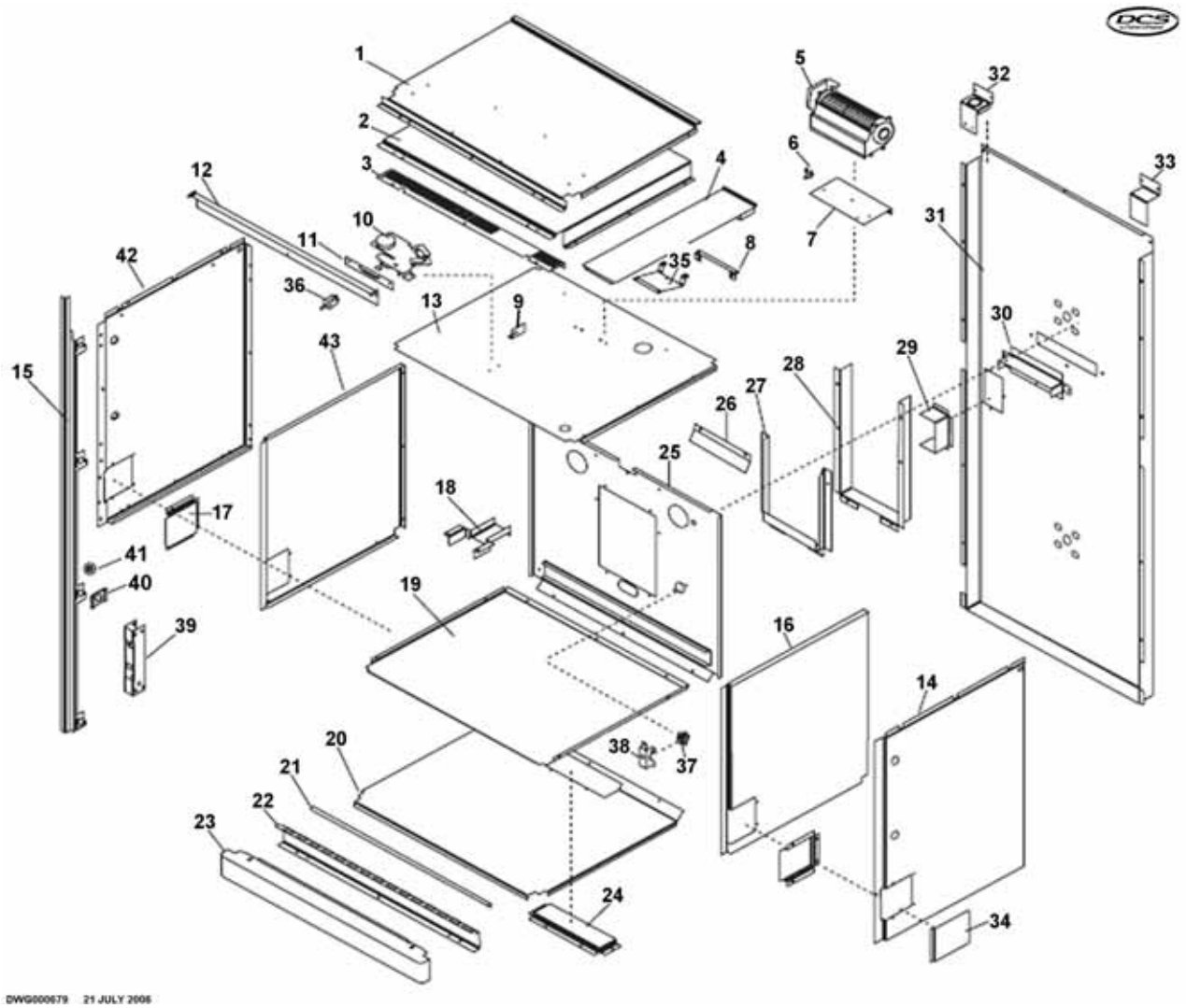

UPPER OVEN COMPONENTS

REF	PART	DESCRIPTION
1	233097	OUTER AJ TOP
2	233129	AIR DUCT
3	217185	LATCH COVER TOP
4	233185	CATALYST DUCT W/A
5	211705	BLOWER MOTOR
6	211701	BLOWER THERMOSTAT
7	233250	BLOWER MOTOR BKT
8	233249	CATALYST DUCT BKT
9	217135	LATCH RETAINER
10	211691	DOOR LATCH - STH -1994 CLASS B
11	217134	LATCH MOUNT
12	217121	LATCH COVER BOTTOM
13	233146	UPPER AIR JACKET
14	217131	OUTSIDE AIR JACKET RH
15	217314	SIDE TRIM W/A LH PTD BLACK
	217313	SIDE TRIM W/A RH PTD BLACK
16	217129	INSIDE AIR JACKET RH
17	217105	HINGE POCKET
18	233147	BROIL TERMINAL BOX
19	233122	LOWER AIR JACKET
20	233154	LOWER INTAKE DUCT BOTTOM UP
21	217119	DRIP BRACKET
22	NOT USED	ITEM NOT USED IN THIS MODEL
23	NOT USED	ITEM NOT USED IN THIS MODEL
24	233155	BLOWER MOTOR AIR CHAMBER
25	233121	REAR AIR JACKET
26	233099	CONV TOP INSUL RETAINER
27	233128	BTM CONV INSULATION RETAINER
28	233132	CONVECTION CHANNEL
29	233140	BLOWER MOTOR REAR AIR GUARD
30	233156	CONVECTION DUCT
31	233477	BACK COVER
32	217109	CONTROL BOX BOTTOM RH
33	217108	CONTROL BOX BOTTOM LH
34	233114	HINGE COVER
35	217114	CAT SCOOP
36	211651	DOOR LIGHT SWITCH
37	210770	HI-TEMP CUTOUT
38	233115	HTC BRACKET
39	211476	HINGE RECEPTACLE
40	211117	INSIDE SPACER
41	211118	OUTSIDE SPACER
42	217132	OUTSIDE AIR JACKET LH
43	217130	INSIDE AIR JACKET LH

217834

LOWER OVEN COMPONENTS

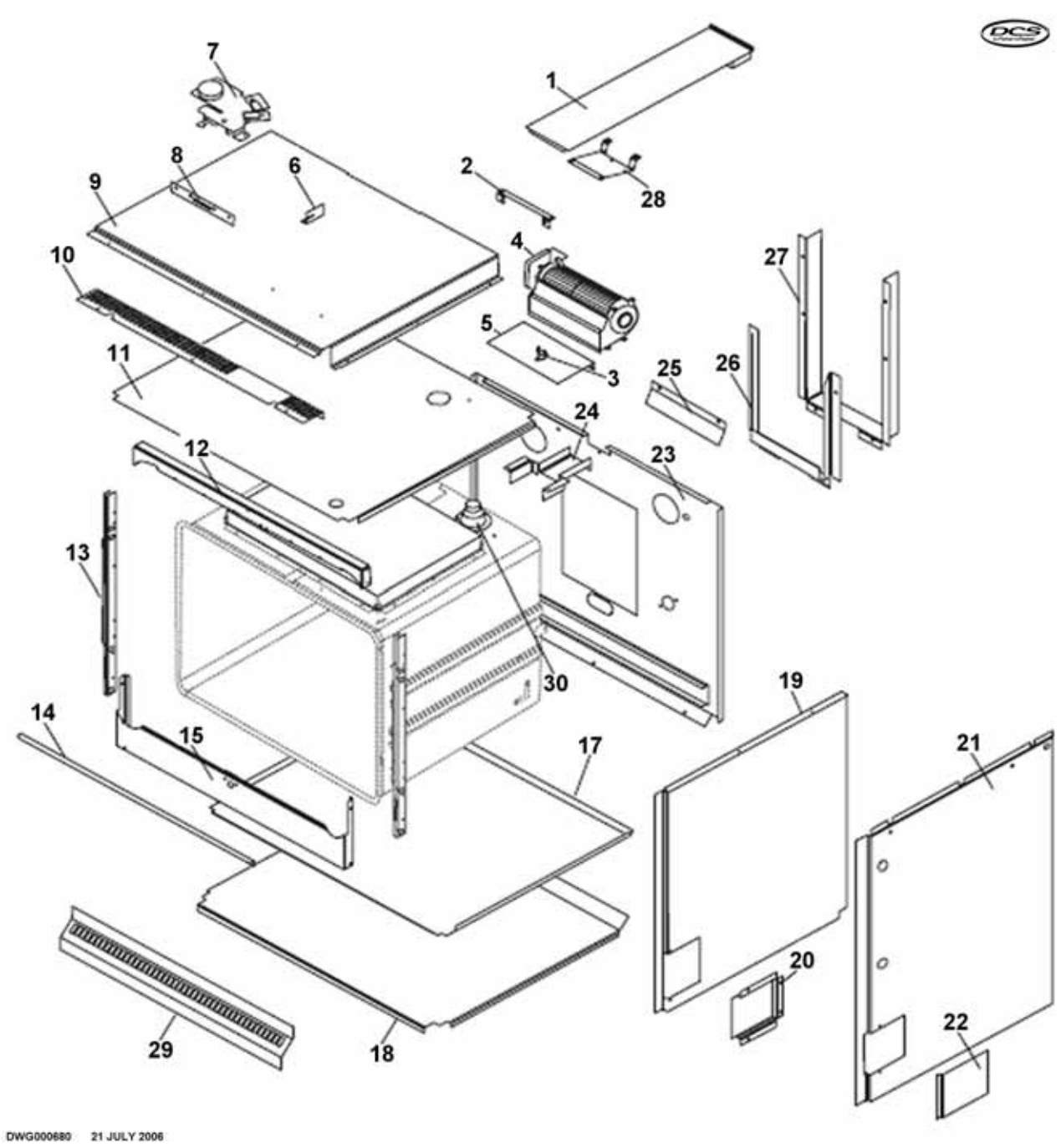

LOWER OVEN COMPONENTS

REF	PART	DESCRIPTION
1	233185	CATALYST DUCT W/A
2	233249	CATALYST DUCT BKT
3	211701	BLOWER THERMOSTAT
4	211705	BLOWER MOTOR
5	233250	BLOWER MOTOR BKT
6	217135	LATCH RETAINER
7	211691	DOOR LATCH - STH -1994 CLASS B
8	217134	LATCH MOUNT
9	233129	AIR DUCT
10	217185	LATCH COVER TOP
11	233146	UPPER AIR JACKET
12	233172	FRONT FRAME TOP W/A PORC
13	217116	FRONT FRAME SIDE RH PORC
	217117	FRONT FRAME SIDE LH PORC
14	217119	DRIP BRACKET
15	217149	FRONT FRAME BTM W/A PORC
17	233122	LOWER AIR JACKET
18	217133	LOWER INTAKE DUCT BOTTOM LO
19	217129	INSIDE AIR JACKET RH
	217130	INSIDE AIR JACKET LH
20	217105	HINGE POCKET
21	217131	OUTSIDE AIR JACKET RH
	217132	OUTSIDE AIR JACKET LH
22	233114	HINGE COVER
23	233121	REAR AIR JACKET
24	233147	BROIL TERMINAL BOX
25	233099	CONV TOP INSUL RETAINER
26	233128	BTM CONV INSULATION RETAINER
27	233132	CONVECTION CHANNEL
28	217114	CAT SCOOP
29	217110	BOTTOM TRIM STNL STL
30	210370	CATALYST

BAKE COMPONENTS

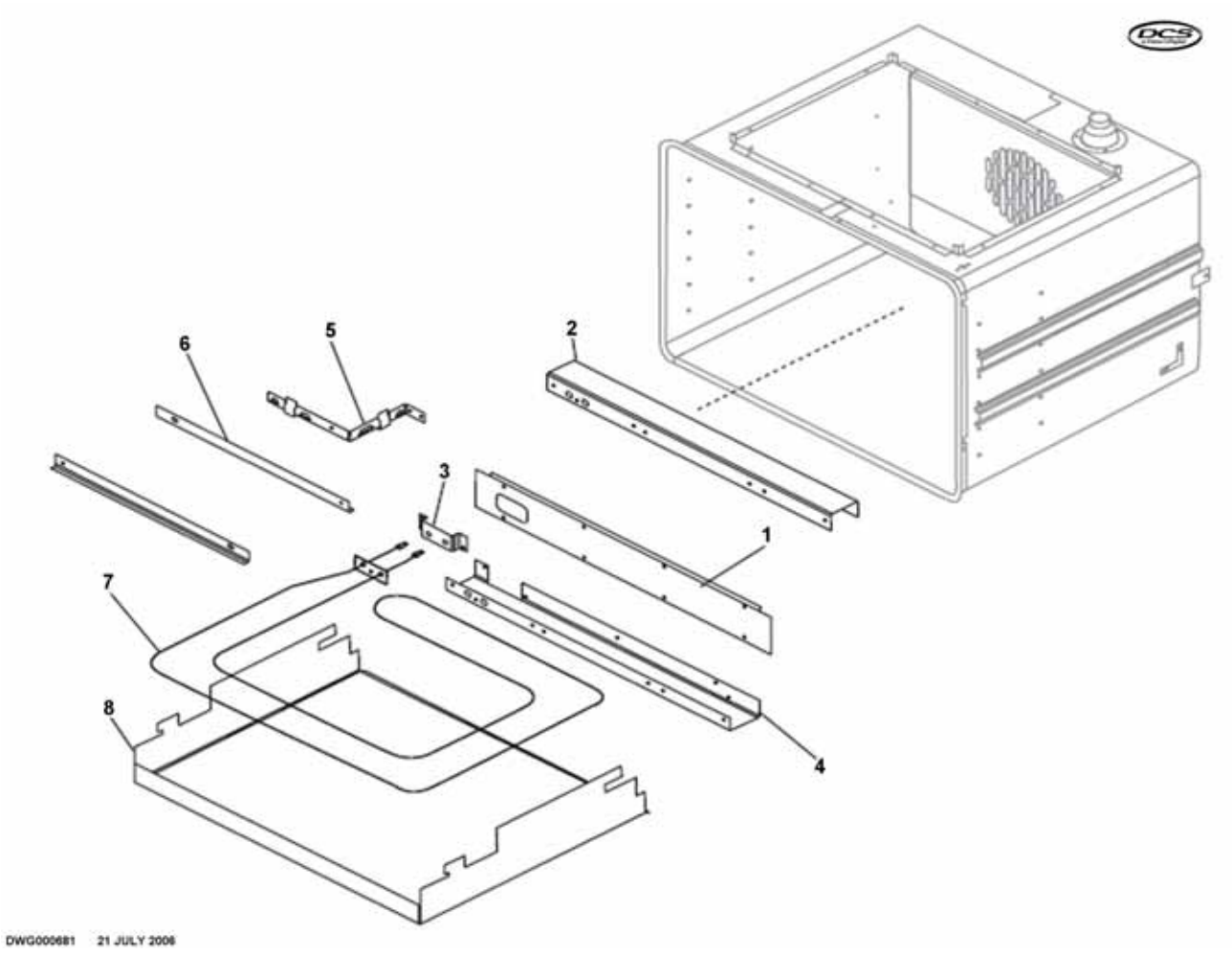

BAKE COMPONENTS

REF	PART	DESCRIPTION
1	233141	ELEMENT MOUNTING BRACKET
2	233139	BAKE BOX REAR BKT TOP
3	233107	BAKE ELEMENT BKT REAR
4	233138	BAKE BOX REAR BKT BTM
5	233103	BRACKET LONG BAKE ELEMENT
6	233106	BAKE ELEMENT HOLDER
7	211704	BAKE ELEMENT 27 WALL OVEN
8	233130	BAKE ELEMENT BOX
NI	233104	BRACKET SMALL BAKE ELEMENT
NI	233174	BAKE ELEMENT ASSY WO27

FASTENERS

PART	DESCRIPTION
211238	SM 10X1/2 SL TD HWH SMS, ZIN
211248	SMS 6-32X3/8 PH PN TY F SS
211231	SM 6 X1/4 PH PN HD TY A ZI
211259	8-32X1/4 PHIL PN F-410 SS
211301	MS 4-40 X 1/4 PH RD HD SS
211358	NUT HEX 4-40 SS
211236	SM 10X3/8 PH TR HD TY AB NI
211304	HEX BOLT M5-8X12mm BLK OX
211232	SM 10X3/8 SL TR HD TY A BK
211263	SMS 8-32x1/2 PH PN HD TY F SS
211225	SM 10X1/2 PH TR HD TY AB ZN
211270	MS 6-32X1/2 PH PN HD ZN
211396	NUT HEX 6-32 KEPS ZN
211371P	WASHER FLT SS #103/4 (10 PK)
218131	SM 10X3/4 PH TR HD TY ABN (10 PK)
211353	NUT HEX 8-32 LK NYLON INST SS
211255	MS 10X1/2 FL HD PH TY AB CRS
211233P	MS 10X1/2 PH TRHD TY AB BK OX (10 PK)
211241P	SMS10-24X1/2 PH TR TY23 ZI (10 PK)
211235	SM 10X3/8 PH TR HD TY A SS
211253	MS 1/4-20X3/8 SL HX HD WH TY F